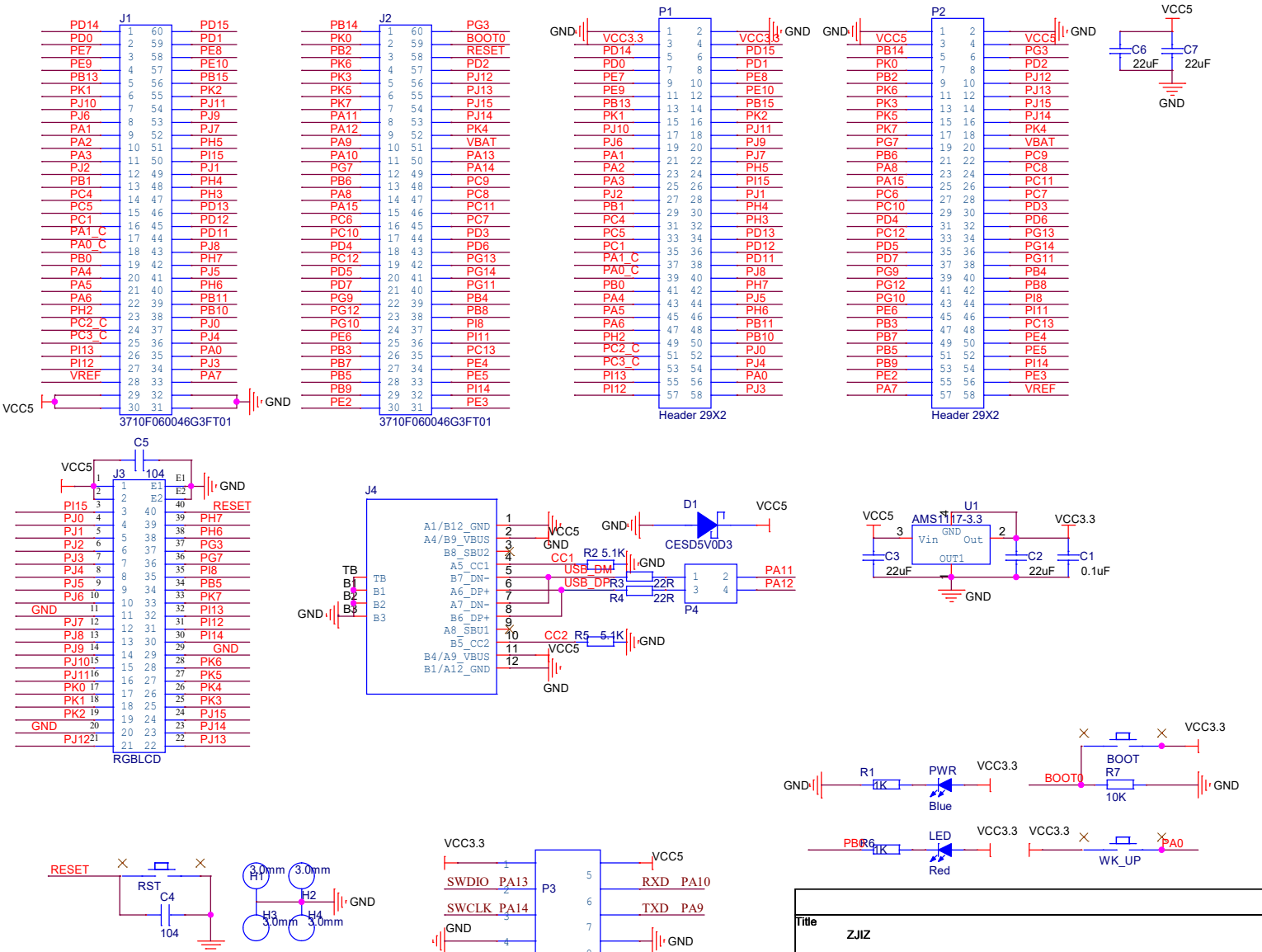

Title	ZJIZ	
Size	Document Number Custom<John@aldpcb.com>	Rev RevC
Date: Wednesday, January 28, 2026	Sheet 1 of 1	